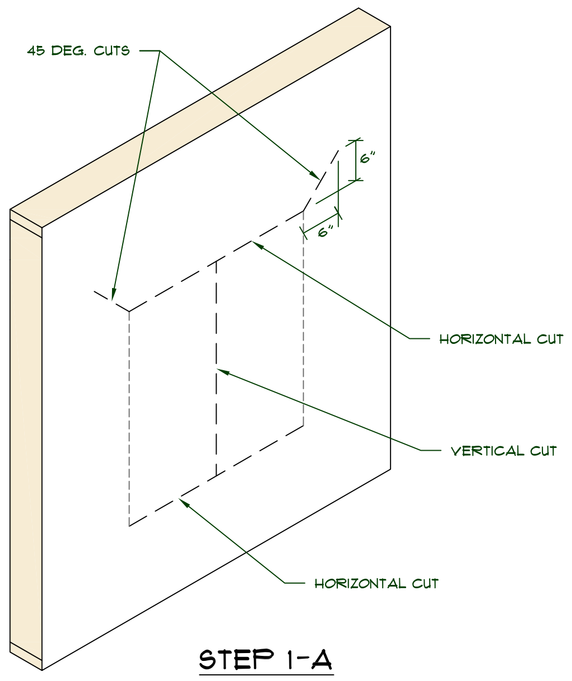

STEP 1-A

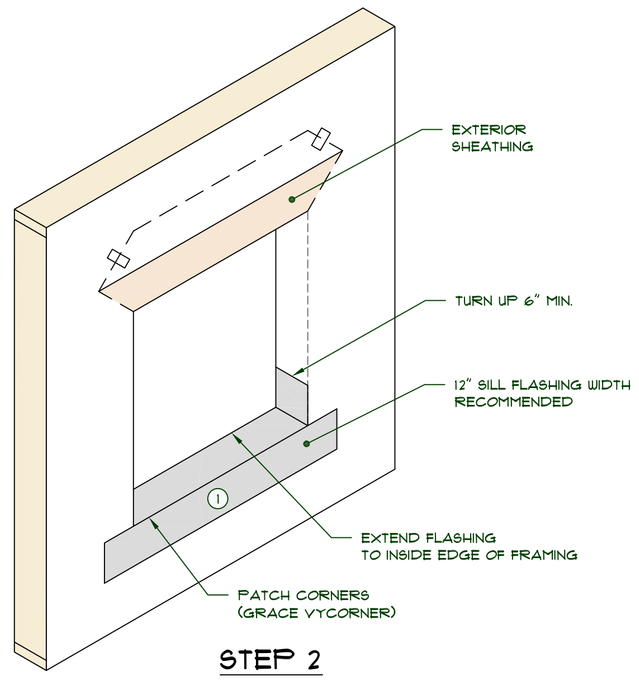

STEP 2

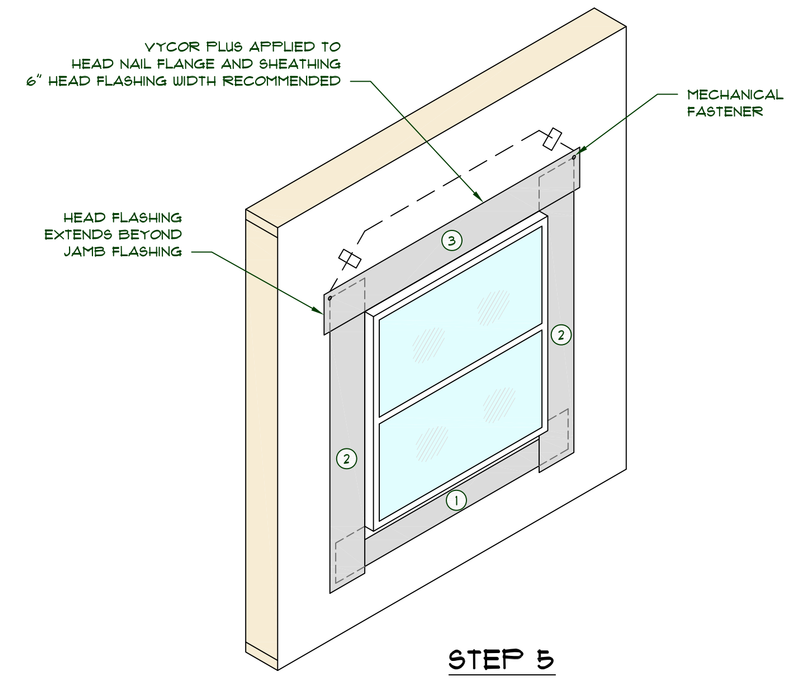

STEP 5

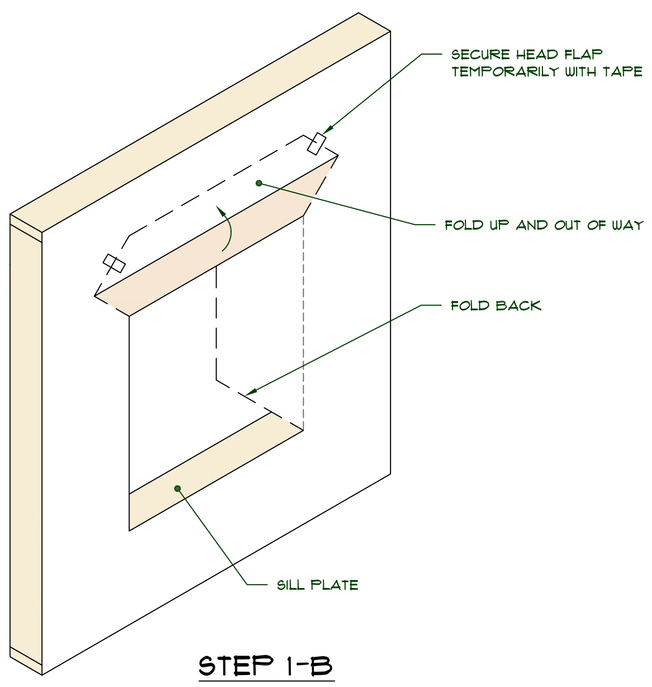

STEP 1-B

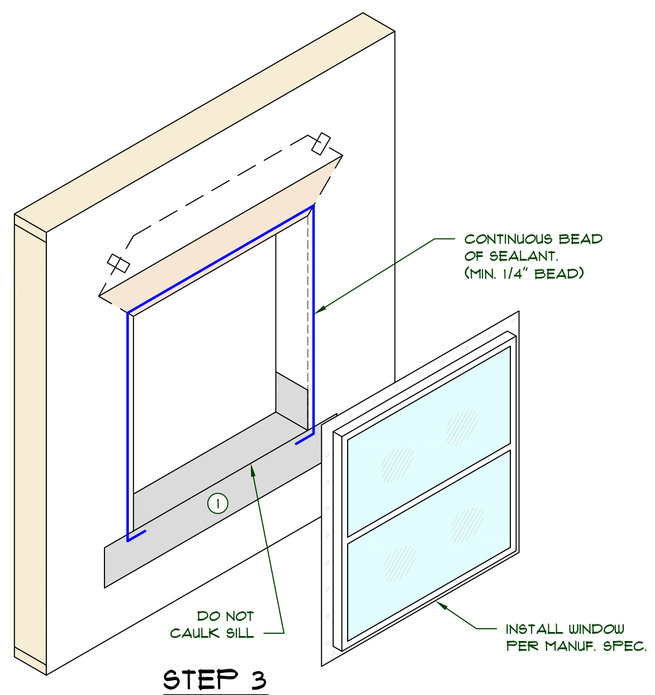

STEP 3

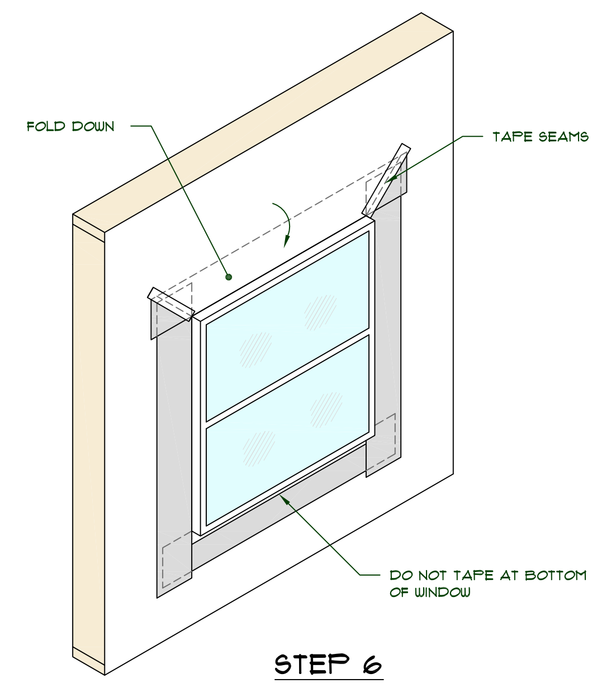

STEP 6

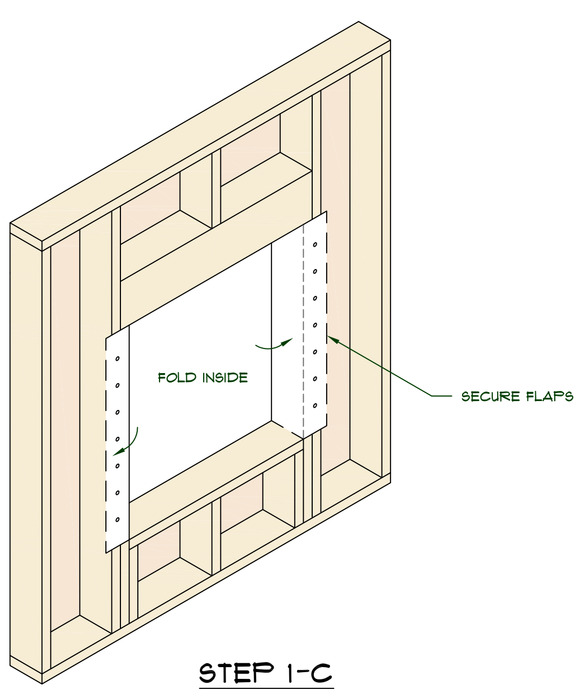

STEP 1-C

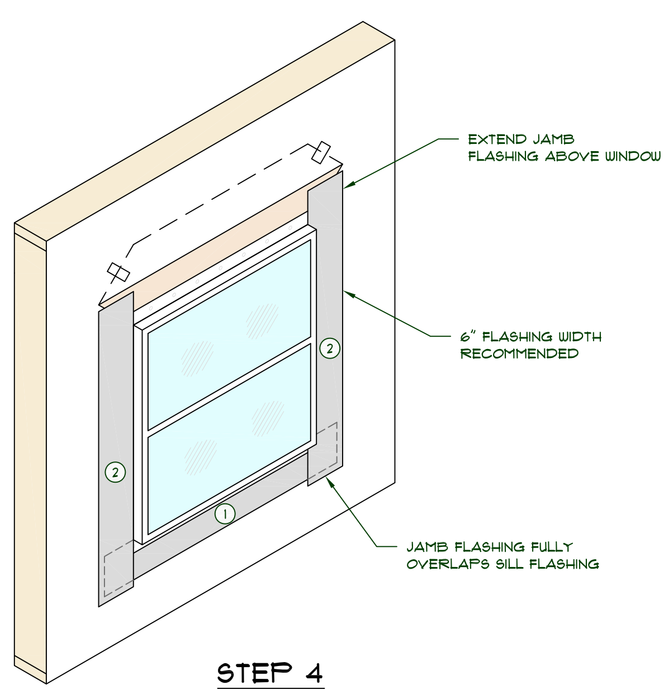

STEP 4

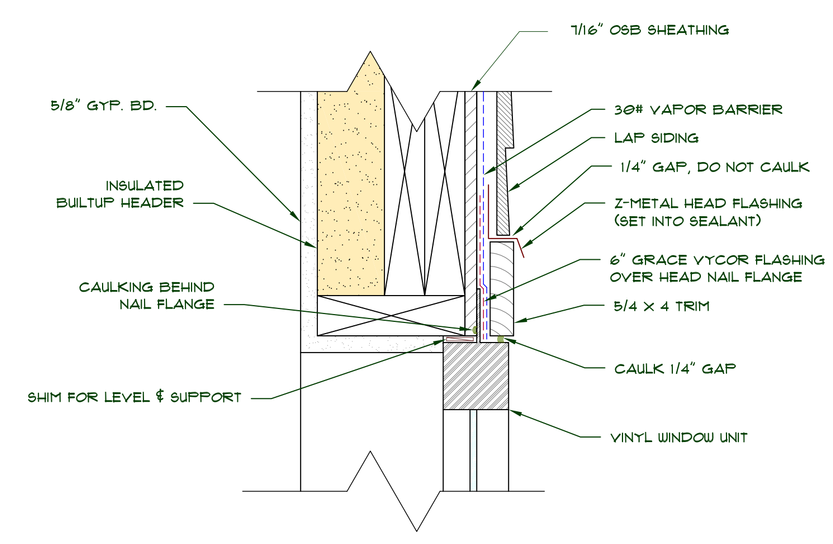

7 WINDOW HEAD DETAIL

SCALE: 1/2"=1'-0"

STEP 1:

A. MAKE AN "I-CUT" (STANDARD I-CUT) IN THE WEATHER-RESISTIVE BARRIER (30# FELT). A MODIFIED I-CUT IS ALSO ACCEPTABLE. BEGIN WITH A HORIZONTAL CUT ACROSS THE TOP AND BOTTOM OF THE WINDOW OPENING. AT THE CENTER OF THE WINDOW OPENING CUT STRAIGHT DOWN FROM THE TOP TO THE WINDOW SILL. WEATHER-RESISTIVE BARRIER SHOULD BE REMOVED FROM TOP OF SILL PLATE.
B. CUT TWO 45 DEGREE SLITS APPROX. 6"-8" EXTENDING FROM THE CORNER OF THE WINDOW HEAD, UP AND AWAY FROM THE WINDOW OPENING. THIS WILL CREATE A FLAP ABOVE THE ROUGH OPENING TO ALLOW HEAD FLASHING INSTALLATION. FLIP HEAD FLAP UP AND TEMPORARILY SECURE WITH TAPE.
C. FOLD SIDE FLAPS INTO ROUGH OPENING AND SECURE TO INSIDE WALL. FLAPS SHOULD EXTEND TO INSIDE EDGE OF WINDOW FRAMING. CUT OFF EXCESS FLAPS AS DESIRED.

STEP 2:

A. PRE-CUT GRACE VYCOR PLUS FLASHING FOR SILL, JAMB AND HEAD FLASHINGS. SEE TABLE BELOW FOR FLASHING LENGTH CUT LENGTHS. A 12" WIDE FLASHING IS RECOMMENDED FOR 2X6 EXTERIOR WALLS SO THAT A FULL DRAINAGE PLANE IS PROVIDED IN THE ROUGH OPENING. A 6" WIDE FLASHING IS RECOMMENDED FOR HEAD AND JAMB FLASHINGS.
B. APPLY SILL FLASHING TO TOP WINDOW SILL. FLASHING SHOULD EXTEND TO INSIDE EDGE OF SILL FRAMING TO PROVIDE A FULL DRAINAGE PLANE FOR WINDOW OPENING. FLASHING SHOULD EXTEND VERTICALLY UP THE JAMBS A MINIMUM OF 6" ON BOTH SIDES. NOTE: SILL FLASHING SHOULD NOT WRAP ONTO THE INSIDE OF THE WALL.
C. MAKE VERTICAL RELIEF CUTS STARTING FROM CORNER OF WINDOW SILL UPWARDS. ROLL SILL FLASHING FIRMLY ONTO EXTERIOR OF WALL. NOTE: SILL FLASHING SHOULD NOT EXTEND PAST OUTSIDE EDGES OF JAMB FLASHING.
D. APPLY CORNER PATCH AT BASE OF RELIEF CUTS IN SILL FLASHING.

STEP 3:

A. APPLY A CONTINUOUS BEAD OF SEALANT (MIN. 1/4") TO ROUGH OPENING TO ENSURE CONTACT WITH BACKSIDE (INTERIOR) OF WINDOW NAIL FLANGE. ONLY APPLY SEALANT TO THE HEAD AND JAMBS. DO NOT CAULK ALONG SILL (BOTTOM OF WINDOW).
B. INSTALL WINDOW PER MANUFACTURER'S RECOMMENDATION AND INSTALLATION PROCEDURE.
C. REMOVE ANY EXCESS SEALANT FROM WINDOW'S NAILING FLANGES AND SURROUNDING AREA TO PROVIDE A SMOOTH CONTINOUS SUBSTRATE FOR JAMB AND HEAD FLASHINGS.

STEP 4:

A. INSTALL PRE-CUT JAMB FLASHINGS ON TOP OF NAILING FLANGES AFTER WINDOW HAS BEEN FULLY INSTALLED. ROLL FIRMLY INTO PLACE.
B. JAMB FLASHING SHOULD EXTEND BEYOND SILL FLASHING AT BOTTOM OF WINDOW OPENING BOTH VERTICALLY AND HORIZONTALLY. AVOID REVERSE FLASHING AT THIS INTERSECTION.
C. JAMB FLASHING SHOULD EXTEND APPROX. 6" ABOVE TOP OF WINDOW.

STEP 5:

A. INSTALL PRE-CUT HEAD FLASHING ON TOP OF WINDOW HEAD NAILING FLANGE. ROLL FIRMLY INTO PLACE.
B. MECHANICALLY FASTEN HEAD FLASHING AT TOP OUTERMOST CORNERS.
C. HEAD FLASHING SHOULD EXTEND BEYOND OUTER EDGES OF JAMB FLASHINGS.

STEP 6:

A. REMOVE TEMPORARY SECUREMENT OF WEATHER-RESISTIVE BARRIER (#30 FELT) FLAP.
B. FOLD FLAP DOWN OVER HEAD FLASHING.
C. TAPE ALL SEAMS AND JOINTS WITH WEATHER-RESISTIVE BARRIER SEAM TAPE AS REQUIRED.

STEP 7:

A. INSTALL TRIM BOARDS AROUND WINDOW PERIMETER.
B. CAULK ALL GAPS BETWEEN WINDOW AND TRIM BOARDS.
C. INSTALL METAL HEAD FLASHING (Z-METAL) ABOVE HEAD TRIM BOARD. SET METAL FLASHING INTO A CONTINUOUS BEAD OF SEALANT.
D. INSTALL LAP SIDING, CAULKING ALL GAPS.
E. INTERIOR SEAL: APPLY INSULATING FOAM SEALANT (AND BACKER ROD AS NECESSARY).
F. DO NOT CAULK BOTTOM OF FIRST RUN OF SIDING

LOCATION	FLASHING LENGTH FORMULA
SILL FLASHING	R.O WIDTH + (2 X FLASHING WIDTH)
JAMB FLASHING	R.O WIDTH + (2 X FLASHING WIDTH) - 1
HEAD FLASHING	R.O WIDTH + (2 X FLASHING WIDTH) + 2

MEDEEK ENGINEERING INC.
3500 W. 10 COMAX BEACH, WA 98613
JP (425) 420-3713
DEBORA@MEDEEK.COM

THESE DRAWINGS AND SPECIFICATIONS ARE OWNED BY MEDEEK ENGINEERING INC. AND ARE TO BE RETURNED UPON REQUEST. REPRODUCTION OR USE OF THESE DOCUMENTS FOR OTHER THAN THE SPECIFIED PROJECT IS PROHIBITED WITHOUT WRITTEN CONSENT OF MEDEEK ENGINEERING INC.

PROJECT: NEW CONSTRUCTION

JOB NO.

DOORS & WINDOWS

SCALE: 1:16

REVISION: A.2

DESIGNED BY: NPW

DATE: 8/8/2014

SHEET CONTENTS: WINDOW FLASHING DETAILS

REVISION HISTORY:

CUSTOMER:

LOCATION:

SHEET 1 OF 1