FRAMING NOTES:

1. NAIL MSTC52 AND LSTA21 STRAPS ON OPPOSITE SIDE OF SHEATHING AT PORTAL FRAMES.
2. NAIL MSTC52 (HORIZ.) ON OPPOSITE SIDE OF SHEATHING FOR INTERMEDIATE BRACED WALL PANEL (SWL A PANEL 2) AND LSTA36 ON TOP OF SHEATHING (TWO PLACES).
3. SWL A PANEL 1 AND SWL A PANEL 3 SHALL BE CONSTRUCTED PER DETAIL 2: GARAGE DOOR PORTAL FRAME AS SHOWN BELOW.
4. STHD14 HOLDOWNS SHALL BE NO MORE THAN 1-1/2" FROM CORNERS OR EDGES.
5. EXCEPT FOR SHEAR PANELS AND PORTAL FRAMES ALL SHEATHING AT WALL LINE A SHALL BE 7/16 OSB/PLY (GRADE 24/16) WITH 8D NAILS @ 6" O/C EDGES AND 12" O/C FIELD.
6. ALL ADDITIONAL BLOCKING, STUDS, TRIMMERS AND NAILERS NOT SPECIFIED SHOULD BE TYPICAL STUD MATERIAL
7. INSULATE ALL WALL CAVITIES PRIOR TO CLOSING WALL WITH SHEATHING/GYP BOARD ON INTERIOR WALL.
8. ANCHOR BOLTS SHOULD EXTEND MIN. 3/4" ABOVE SILL PLATE FOR NUT AND WASHER INSTALLATION.
9. ALL SIMPSON STRONG TIE CONNECTORS AND HANGERS TO BE INSTALLED WITH STRICT ACCORDANCE TO MANUF. INSTALLATION REQS. SEE INSTALLER GUIDE: S-C-INSTALL14.
10. INSTALL SILL SEAL FOAM GASKET BETWEEN SILL PLT. AND FOUNDATION.
11. CONTRACTOR SHALL VERIFY ALL SITE CONDITIONS, MATERIALS AND DIMENSIONS IN THE FIELD.

DESIGN LOADS

FLOOR DEAD LOAD: 10 PSF
FLOOR LIVE LOAD: 40 PSF
ROOF TC DEAD LOAD: 7 PSF
ROOF BC DEAD LOAD: 5 PSF
CEILING DEAD LOAD: 5 PSF
ROOF LIVE LOAD: 20 PSF
ROOF SNOW LOAD (P_g): 15.4 PSF
STAIR LIVE LOAD: 40 PSF
DECK LIVE LOAD: 50 PSF

DESIGN CRITERIA

GROUND SNOW LOAD: 25 PSF
FROST LINE DEPTH: 12"
OCCUPANCY CLASSIFICATION: R
RISK CATEGORY: II
SNOW IMPORTANCE FACTOR: 1.0
WIND SPEED: 155 MPH (ULT)
TERRAIN EXPOSURE: D
WIND IMPORTANCE FACTOR: 1.0
WIND FACTOR ASD: 0.6
SITE CLASS: D (STIFF SOIL)
SEISMIC DESIGN CATEGORY: D
SEISMIC FACTOR ASD: 0.1
SEISMIC IMPORTANCE FACTOR: 1.0
FP CONSTRUCTION TYPE: V-B
SOIL BEARING CAPACITY: 1500 PSF

SWL A DESIGN DATA:

TOTAL SHEAR: 1,734 LBS (WIND ASD)
WALL HEIGHT: 10'-0"
SHEAR PANEL WIDTH: 22-1/2" X 3
PORTAL FRAME SHEAR PANEL HEIGHT: 7'-6"
PORTAL FRAME SHEAR PANEL ASPECT RATIO: 4
UPLIFT @ ANCHORS: 2,905 LBS
UNIT SHEAR: 291 PLF

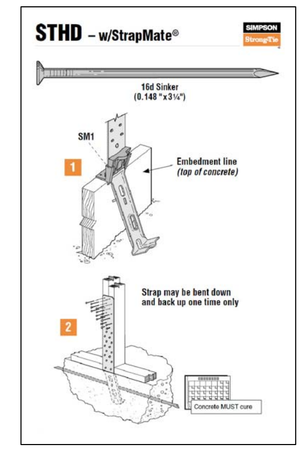

3 STHD14 INSTALLATION DETAILS

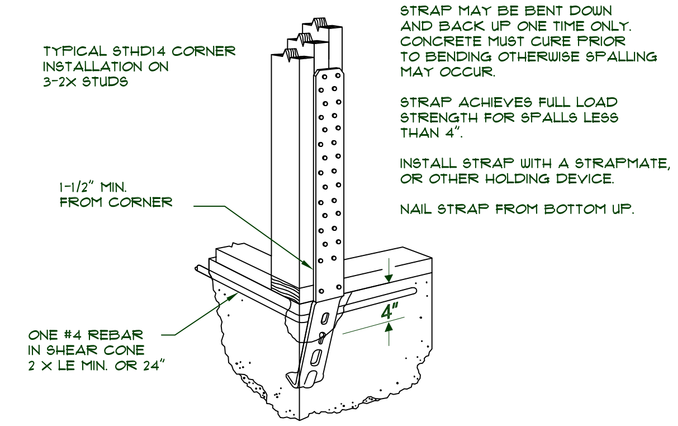

4 STHD14 CORNER INSTALL DETAILS

NOTE:
FLOOR PLANS DIMENSIONS ARE TO FACE OF FRAMING OR CENTERLINE OF OPENINGS TYP. AS SHOWN.

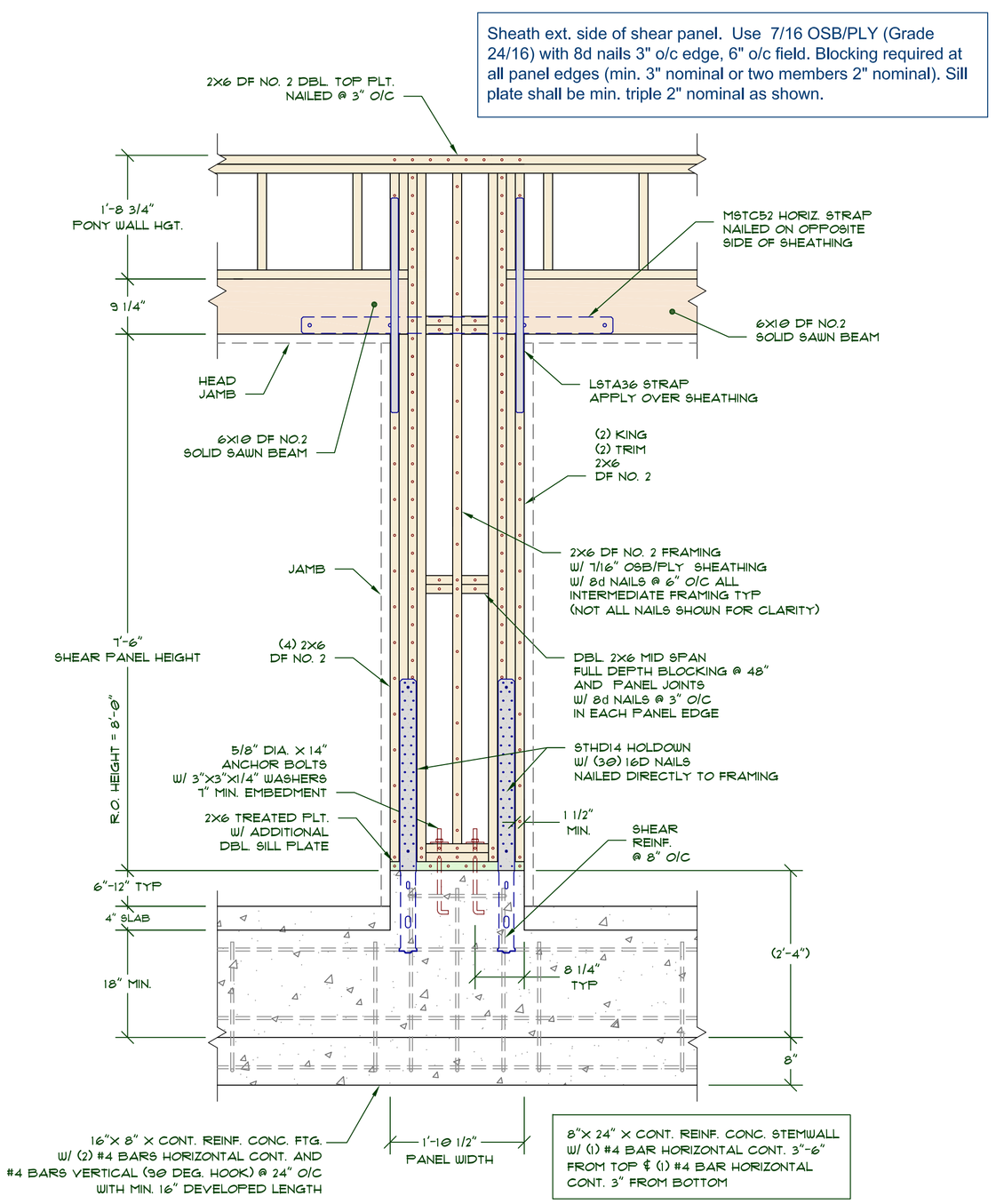

1 GARAGE DOOR INTERMEDIATE BRACED WALL PANEL

SCALE: 3/4"=1'-0"

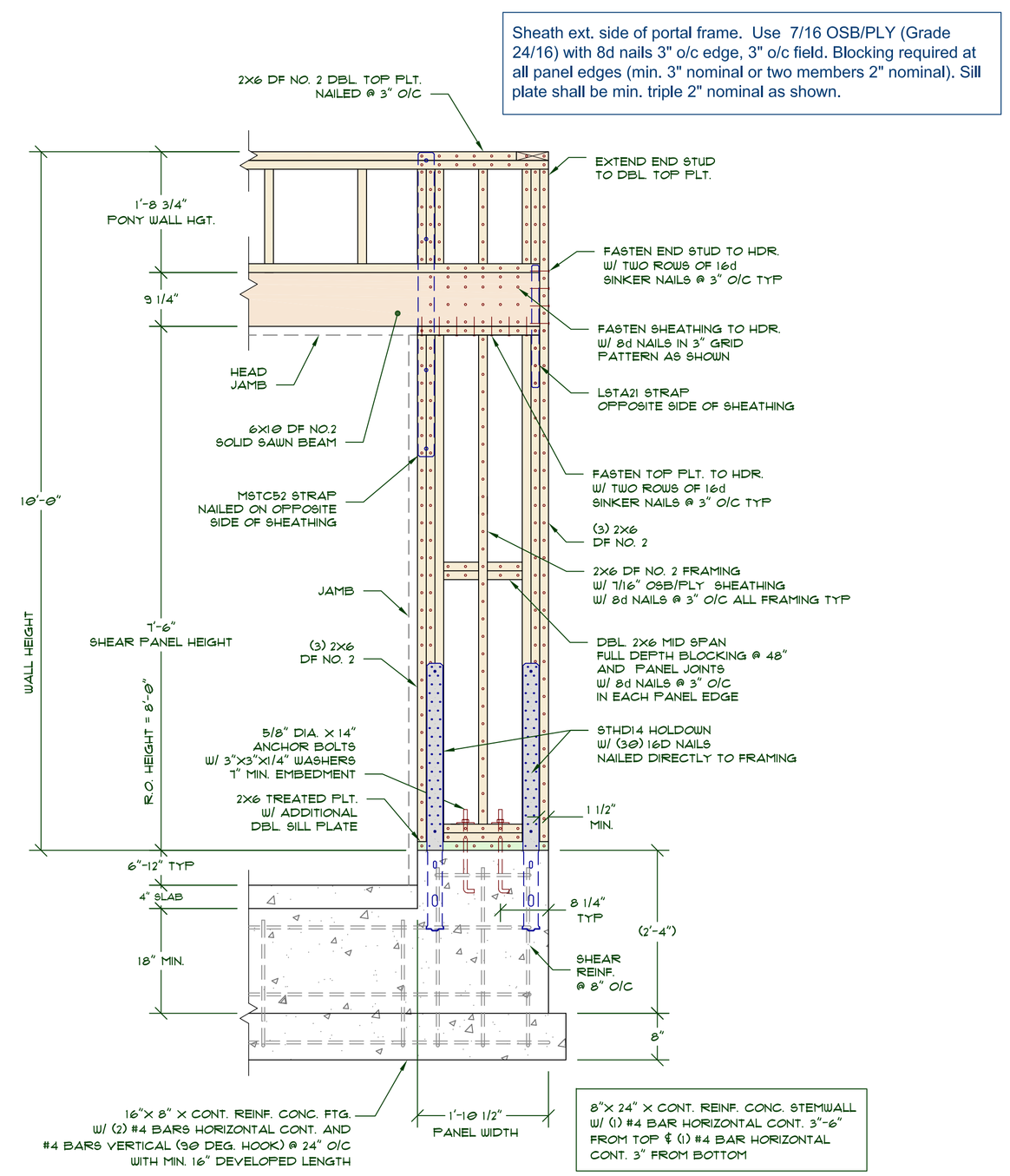

2 GARAGE DOOR PORTAL FRAME

SCALE: 3/4"=1'-0"

GARAGE DOOR SHEAR WALL (SWLA) DETAILS

ATTENTION !

IT IS IMPORTANT FOR THE GENERAL CONTRACTOR TO UNDERSTAND THAT IT IS HIS/HER RESPONSIBILITY TO BE SURE THIS PROJECT IS CONSTRUCTED IN FULL COMPLIANCE WITH ALL STATE AND LOCAL CODES AND ORDINANCES. THE PLANS ARE NOT ALL INCLUSIVE OF ALL MINIMUM CODES AND ORDINANCES. THIS FACT DOES NOT RELIEVE THE CONTRACTOR FROM COMPLIANCE WITH ALL MINIMUM STANDARDS. NO OMISSION FROM THESE PLANS GIVES PERMISSION FOR VIOLATION OF ANY CODE OR ORDINANCE. NO APPROVAL EVEN GRANTS PERMISSION TO VIOLATE ANY CODE OR CITY ORDINANCE.

THE GREATEST EFFORT HAS BEEN MADE TO DRAW THESE PLANS WITHOUT ERROR. HOWEVER THERE IS NO GUARANTEE THAT THESE PLANS ARE WITHOUT ERROR. THE ARCHITECT, DRAFTSMAN & ENGINEER ARE TO BE HELD HARMLESS OF ANY FINANCIAL LIABILITY RESULTING FROM ERRORS IN THESE PLANS. ANY ONE USING THESE PLANS FOR CONSTRUCTION OF THIS BUILDING ACCEPT FULL RESPONSIBILITY. (CHECK PLANS CAREFULLY BEFORE AND DURING CONSTRUCTION)

COPYRIGHT © 2015 MEDEEK DESIGN INC.

MEDEEK ENGINEERING INC.
3030 SR 109 OCEAN BEACH, WA 98613
(P) 1.425.420.2713
DESIGN@MEDEEK.COM

REV. DATE
DESCRIPTION

ALL INTERPRETATIONS OCCURRING DURING THE PERMITTING PROCESS, OR DURING CONSTRUCTION, MUST BE CONSULTED WITH THE DESIGNER. THE DESIGNER IS NOT RESPONSIBLE FOR ANY CHANGES MADE WITHOUT HIS OR HER CONSENT.

PLAN NO.
SMITH RESIDENCE
SCALE: 1/4
REVISION: A.1

DESIGNED BY: NPW
DATE: 5/21/2015

SHEET CONTENTS:
STRUCTURAL DETAILS 1

REVISION HISTORY:

CUSTOMER:
FIRSTNAME LASTNAME

LOCATION:
STREET ADDRESS
CITY, STATE ZIP

SHEET
S1
OF 1