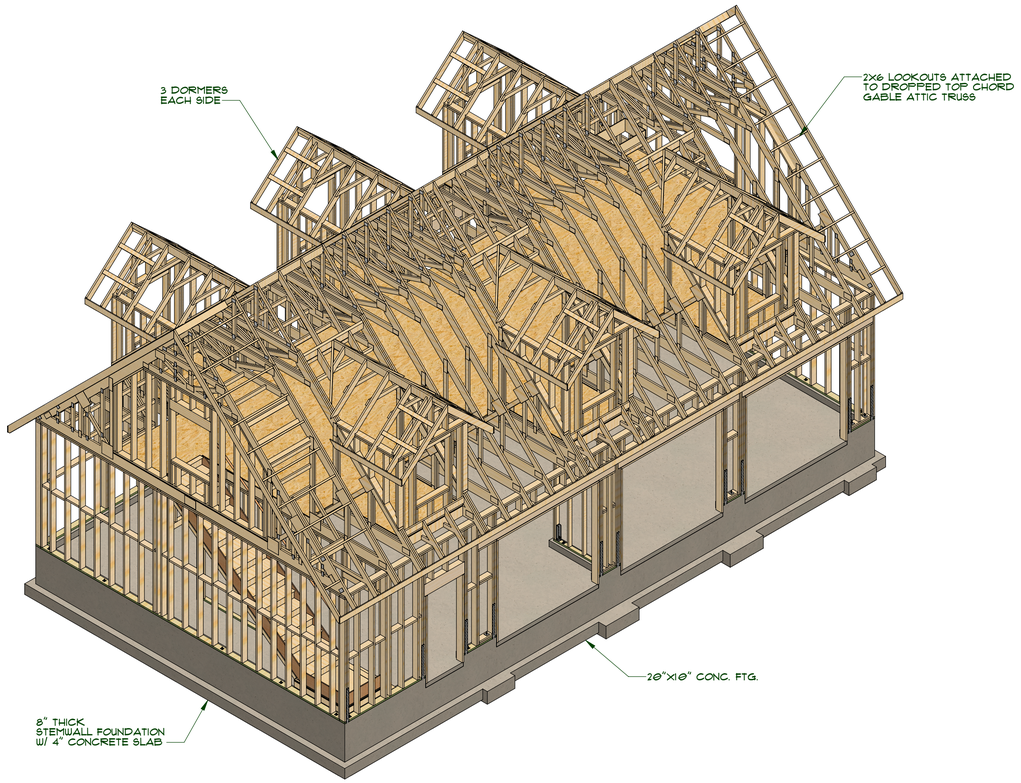

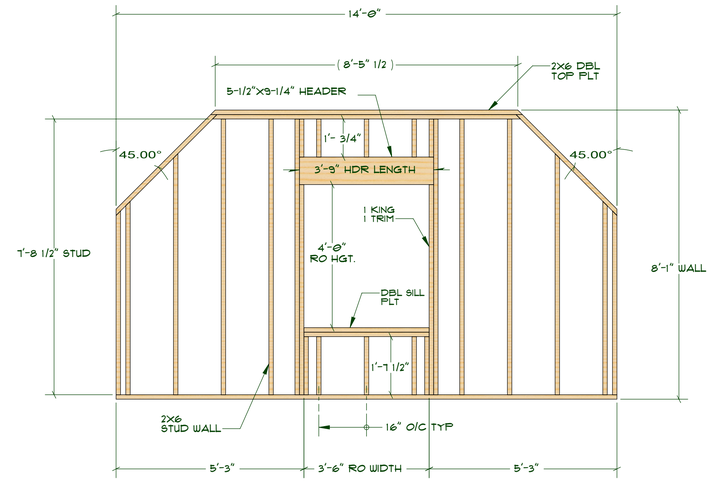

GABLE WALL FRAMING

SCALE: 1/2"=1'-0"

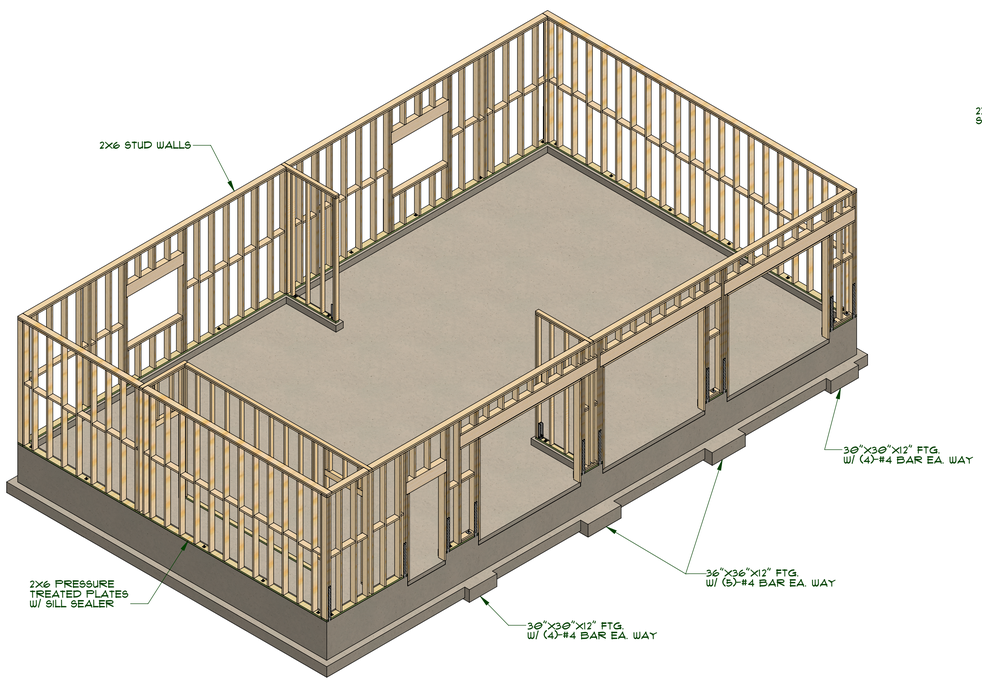

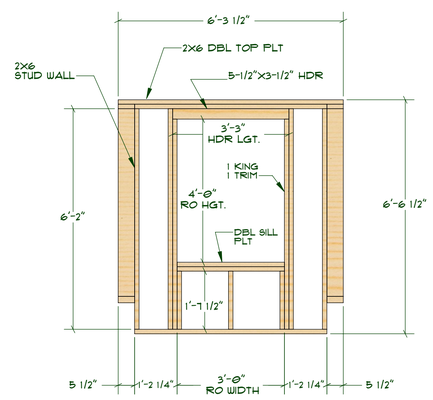

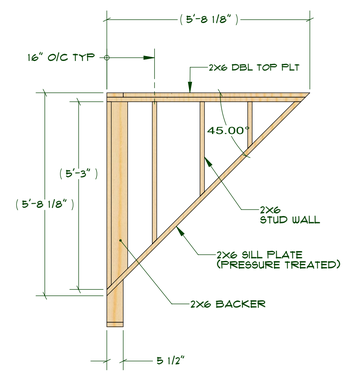

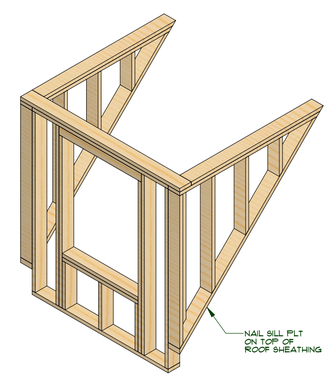

DORMER WALL FRAMING

SCALE: 1/2"=1'-0"

WALL FRAMING NOTES:

1. VERIFY ALL ROUGH OPENING WIDTHS AND HEIGHTS.
2. ALL EXTERIOR WALLS 2X6 STUDS UNLESS OTHERWISE INDICATED.
3. ALL INTERIOR WALL 2X4 STUDS UNLESS OTHERWISE INDICATED.
4. EXT. WALLS 7/16 OSB SHEATHING AND NAILED W/ 8d NAILS @ 6" O/C EDGES AND 12" O/C FIELD.

MEDEEK DESIGN INC.
4403 ALBATTS DR. TOWNSEND, WA 98367
PH: (360) 379-1161 FAX: (360) 379-1162
DESIGN@MEDEEK.COM

THESE PLANS & SPECIFICATIONS ARE THE PROPERTY OF THE DESIGNER AND MUST BE RETURNED UPON REQUEST. REPRODUCTION OR USE WITHOUT WRITTEN PERMISSION IS PROHIBITED.

TITLE:
REVISION:

PLAN NO.: GARAGE4828-A6D-3
REVISION: A.2
SCALE: 1:24

DESIGNED BY: NPW
DATE: 10/12/2014

SHEET CONTENTS: WALL FRAMING ELEVATIONS (3)

REVISION HISTORY:

CUSTOMER:
LOCATION:

SHEET 8 OF 18