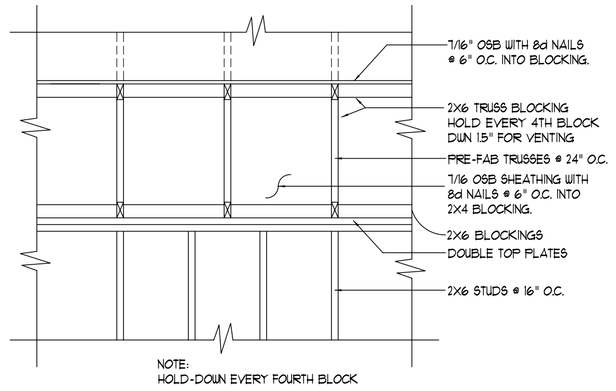

FULL HEIGHT TRUSS BLOCKING DET. (M)

SCALE 1/2"=1'-0"

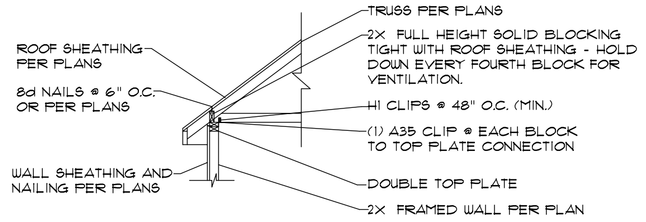

FULL HEIGHT TRUSS BLOCKING WITH HEEL LESS THAN 1'-0" IN HEIGHT (L)

SCALE: 1/4"=1'-0"

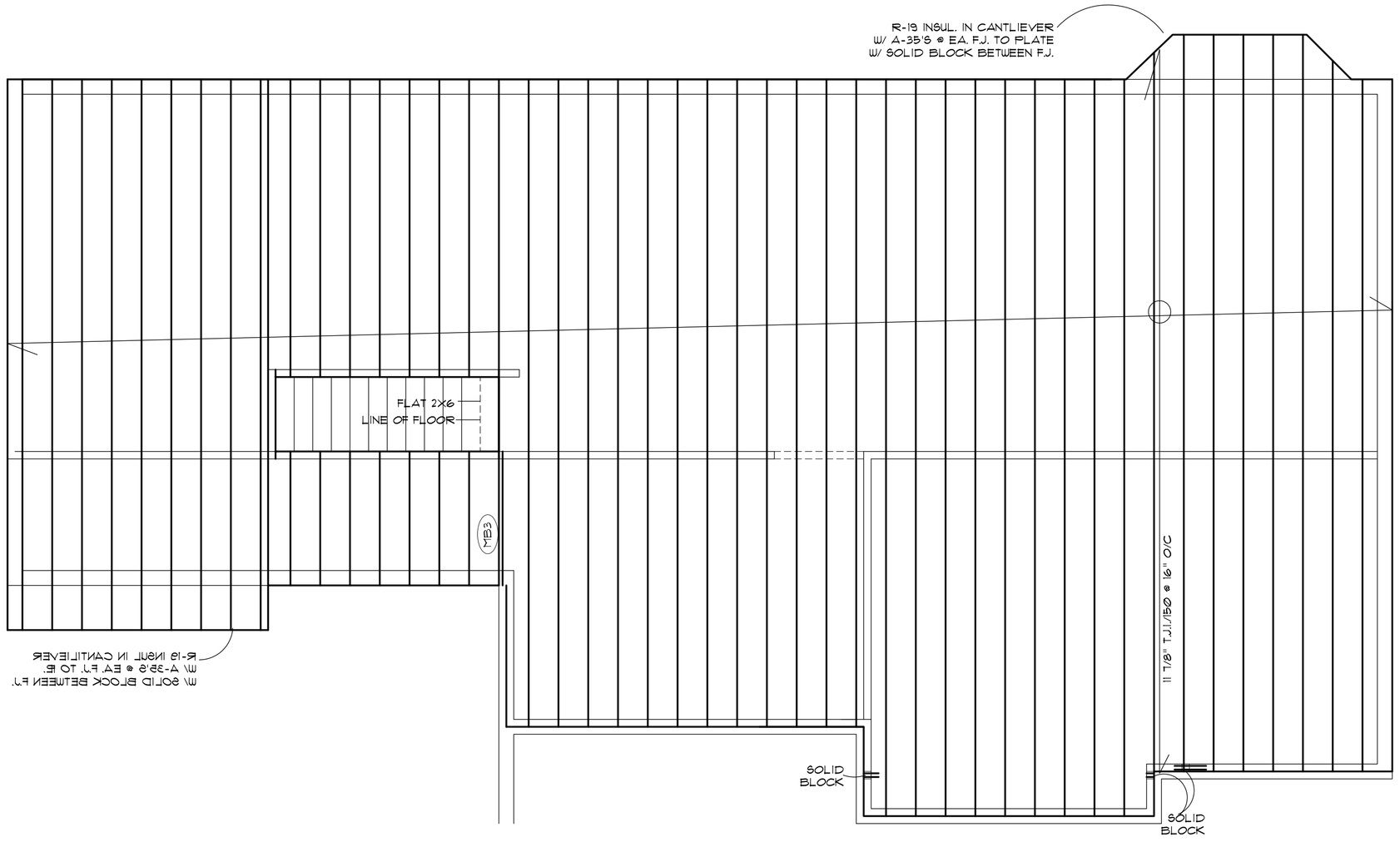

FLOOR FRAMING PLAN

SCALE 1/4"=1'-0"

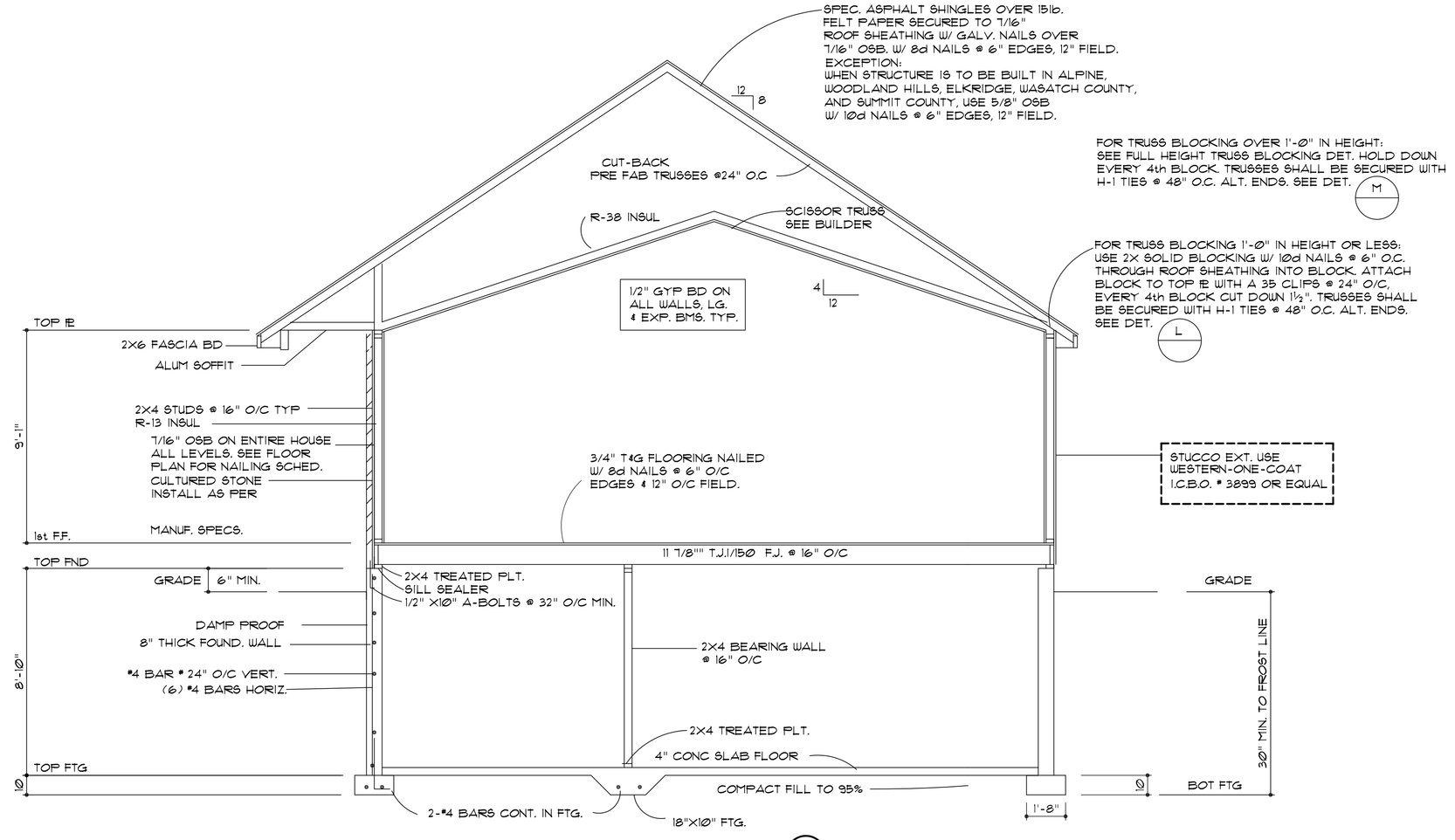

CROSS SECTION (A)

SCALE 1/4"=1'-0"

NOTE:

- INSTALL T.J.I. FLOOR JOISTS AS PER MANUF. SPECS.
- PROVIDE SQUASH BLOCKS FOR ALL BEARING POINTS
- FLOOR SHEATHING TO BE 3/4" OSB T & G GLUED NAILED W/ 8d 6,6,12
- ALL HANGERS TO BE SIMP HU
- ALL HEADERS TO BE 2-2X10 U.N.O.

FLOOR JOIST NOTE:

1. NO FLOOR JOIST SHALL RUN DIRECTLY UNDER A PLUMBING WALL.
2. ALLOW 4" OPENING 12 1/2" AWAY FROM A PLUMBING WALL W/ A TOILET.
3. ALLOW 2" OPENING 7 1/2" AWAY FROM A PLUMBING WALL W/ A TUB.
4. SOLID BLOCK OVER BEARING POINTS.

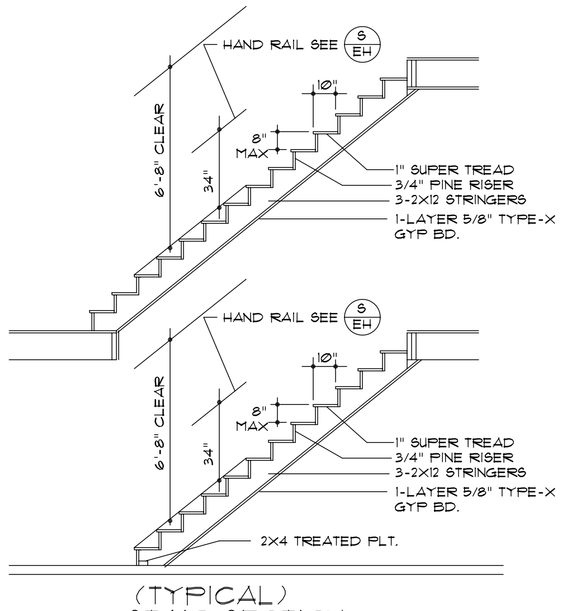

(TYPICAL) STAIR SECTION

SCALE 1/4"=1'-0"

J FISK DESIGNS
931 WEST CENTER (BSMNT) OREM, UTAH 84057
(801) 225-7631 (801) 229-2676 FAX

A RESIDENCE FOR:
WILKERSON, RICHARD
LOCATION: UT44

MAIN FLOOR FRAMING PLAN
CROSS SECTION

REVISIONS

CONTRACTOR TO VERIFY ALL CONDITIONS & DIMENSIONS.

DESIGNED BY
DRAWN BY
JOB #
DATE
SHEET #
5

J FISK DESIGNS RESERVES ITS COMMON LAW COPYRIGHT TO THE CONTENT AND USE OF THESE DRAWINGS OR PLANS. NO PORTION OF THE DRAWINGS OR PLANS ARE TO BE REPRODUCED, CHANGED OR COPIED WITHOUT FIRST OBTAINING THE EXPRESS WRITTEN PERMISSION OF J. FISK DESIGNS.