GENERAL NOTES:

1. WHERE SHEARWALLS INTERSECT AT CORNERS ATTACH SHEARWALL CHORDS W/ 16D NAILS @ 6" O/C STAGGERED.
2. SHEARWALLS SHALL ONLY SHARE A COMMON HOLDOWN IF THE GROSS UPLIFT FORCE IS LESS THAN 2,500 LBS PER EACH SHEAR WALL.
3. TRUSS MANUFACTURERS SHALL BE NOTIFIED OF THE LOCATION AND LATERAL LOADS OF ALL INTERIOR SHEARWALLS.
4. MECH. LAMINATION OF STUDS SHALL BE 16D NAILS @ 12" O/C SPACING, STAGGERED U.N.O
5. ALL SILL PLATES ON CONCRETE STEMWALL FOUNDATIONS SHALL BE PRESSURE TREATED 2X6 HF NO. 2 U.N.O.
6. SHEARWALL BOTTOM PLATES SHALL BE NAILED TO RIM JOIST BELOW WITH (3) 16D NAILS PER 16" BETWEEN STUDS U.N.O.
5. INTERIOR SHEARWALL FRAMING SHALL BE INSPECTED BY ENGINEER OF RECORD TO VERIFY THAT LOAD PATHS ARE CORRECTLY ESTABLISHED.

INTERIOR SHEARWALL NOTES:

1. A MSTC66 STRAP SHALL BE INSTALLED ON THE TOP PLATE OF SWL3 (PANEL2) CONNECTING IT TO MB1 (MAIN BEAM 1) AS SHOWN IN DETAIL 8 BELOW. A MSTC28 STRAP SHALL CONNECT THE OPPOSITE END OF THE BEAM TO THE TOP PLATE OF THE EXT. WALL OF THE DEN AS SHOWN IN DETAIL 8 BELOW.
2. DRAG TRUSS ABOVE INTERIOR SWL 3 SHALL BE DESIGNED BY TRUSS MANUF. TO WITHSTAND A LATERAL LOAD OF 19,261 LBS. (ASD) DUE TO WIND LOADS FROM A RIGID DIAPHRAGM ANALYSIS. THIS DRAG TRUSS SHALL BE SHEATHED WITH 7/16 OSB W/ 8D NAILS @ 4" O/C EDGES, 12" O/C FIELD, BLOCK ALL PANEL EDGES. IF WEB SPACING OF TRUSS IS IN EXCESS OF 24" O/C PROVIDE ADDITIONAL BLOCKING AS NECESSARY.
3. DRAG TRUSS ABOVE ONE END OF INTERIOR SWL B SHALL BE DESIGNED BY TRUSS MANUF. TO WITHSTAND APPROX. HALF THE LATERAL LOAD (3,600 LBS) OF THE SWL B DUE TO WIND LOADS FROM A FLEXIBLE DIAPHRAGM ANALYSIS. THIS DRAG TRUSS SHALL BE SHEATHED WITH 7/16 OSB W/ 8D NAILS @ 3" O/C EDGES, 12" O/C FIELD, BLOCK ALL PANEL EDGES. IF WEB SPACING OF TRUSS IS IN EXCESS OF 24" O/C PROVIDE ADDITIONAL BLOCKING AS NECESSARY.
4. A35 CLIPS SHALL BE INSTALLED @ 8" O/C BETWEEN TOP PLT. OF SWL B AND DRAG TRUSS BOTTOM CHORD.

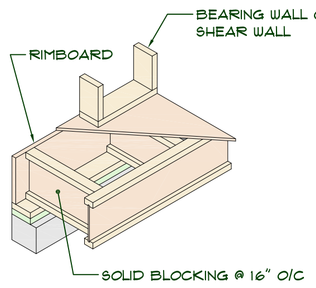

9 BLOCKING DETAIL

SCALE: NTS

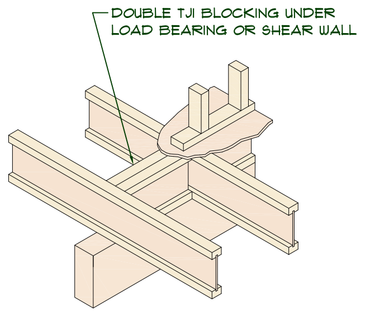

10 BLOCKING DETAIL

SCALE: NTS

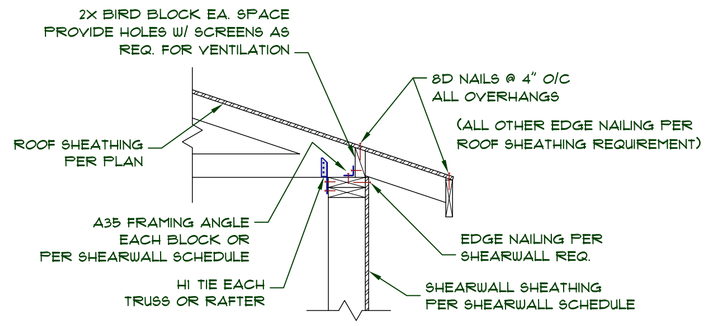

4 TRUSS CONNECTION DETAIL

SCALE: 3/4"=1'-0"

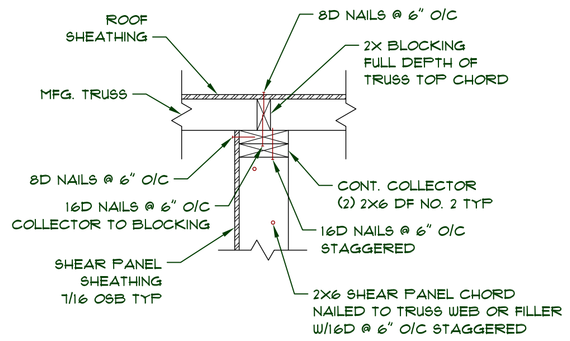

A SHEAR PANEL SECTIONAL VIEW

SCALE: 1"=1'-0"

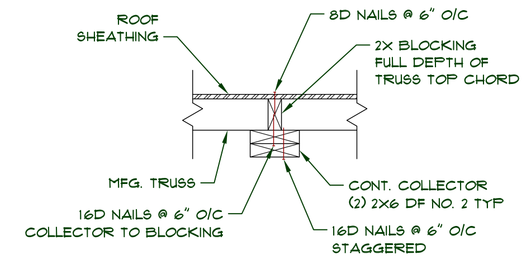

B COLLECTOR SECTIONAL VIEW

SCALE: 1"=1'-0"

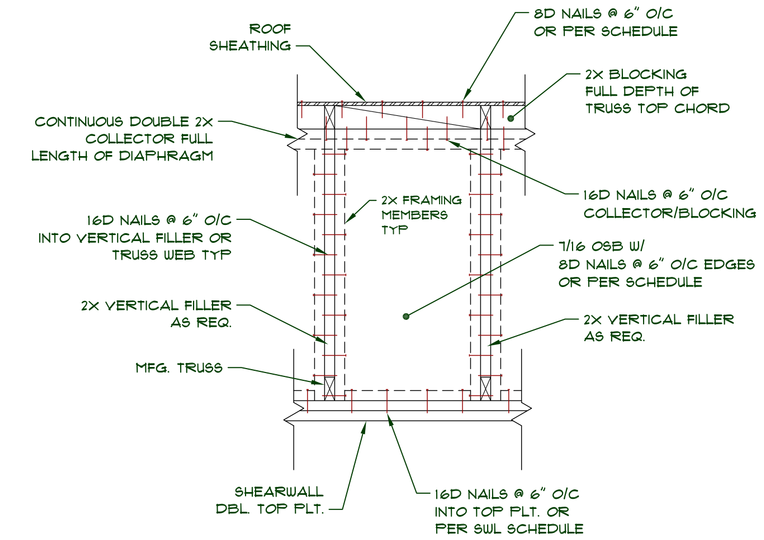

C SHEAR PANEL DETAIL

SCALE: 3/4"=1'-0"

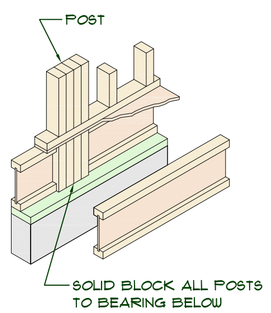

7 SQUASH BLK. DETAIL

SCALE: NTS

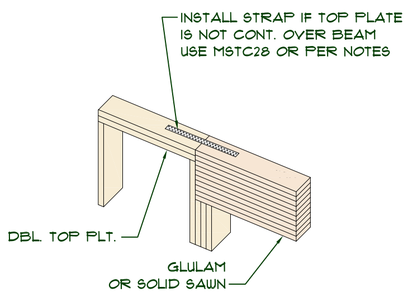

8 STRAP DETAIL

SCALE: NTS

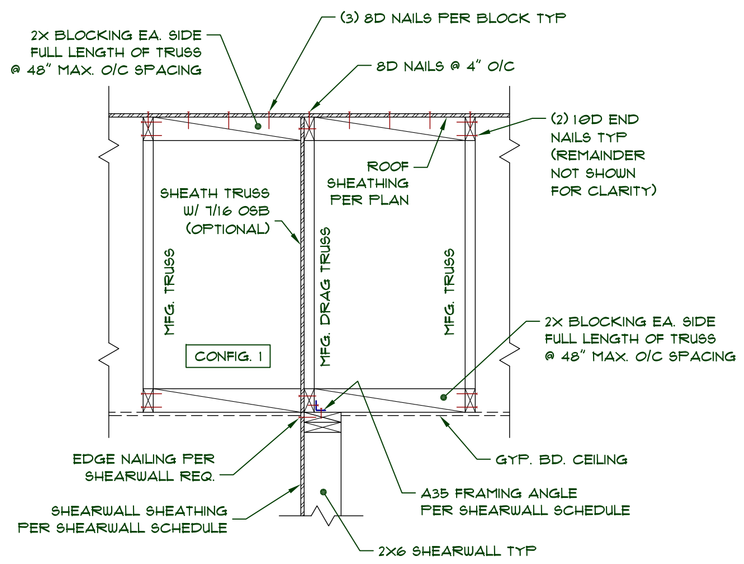

3 INTERIOR SHEARWALL PARALLEL TO TRUSSES

SCALE: 3/4"=1'-0"

PREFERRED METHOD

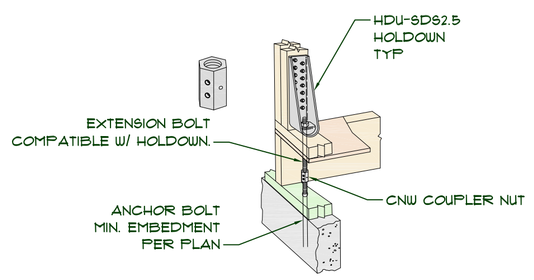

6 HOLDOWN DETAIL

SCALE: NTS

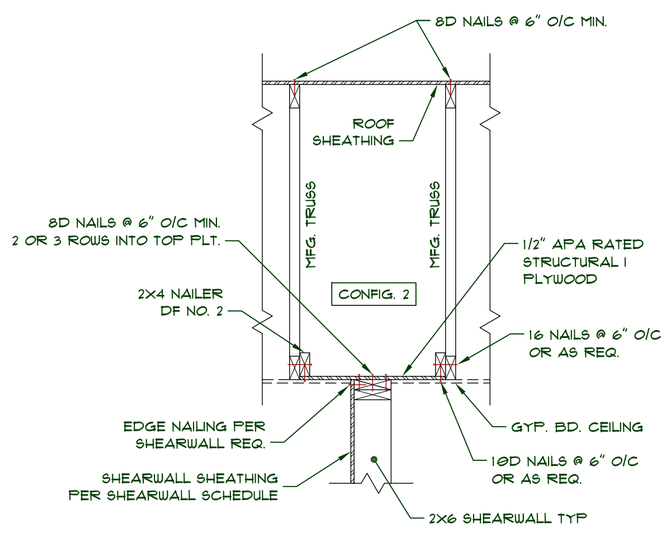

2 INTERIOR SHEARWALL PARALLEL TO TRUSSES

SCALE: 3/4"=1'-0"

ALTERNATE METHOD

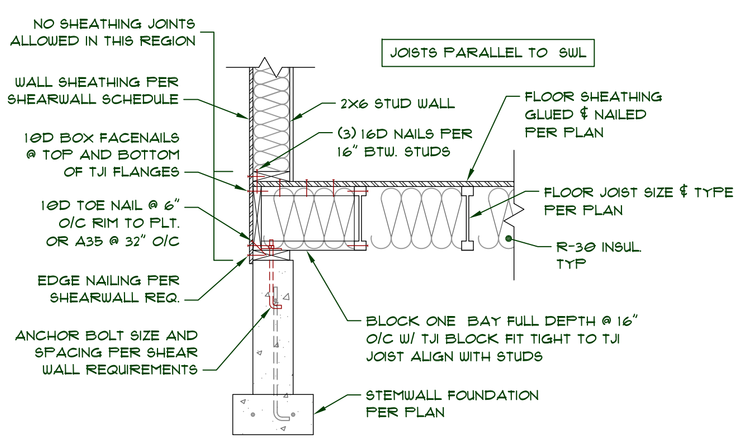

5 FOUNDATION CONNECTION DETAIL

SCALE: 3/4"=1'-0"

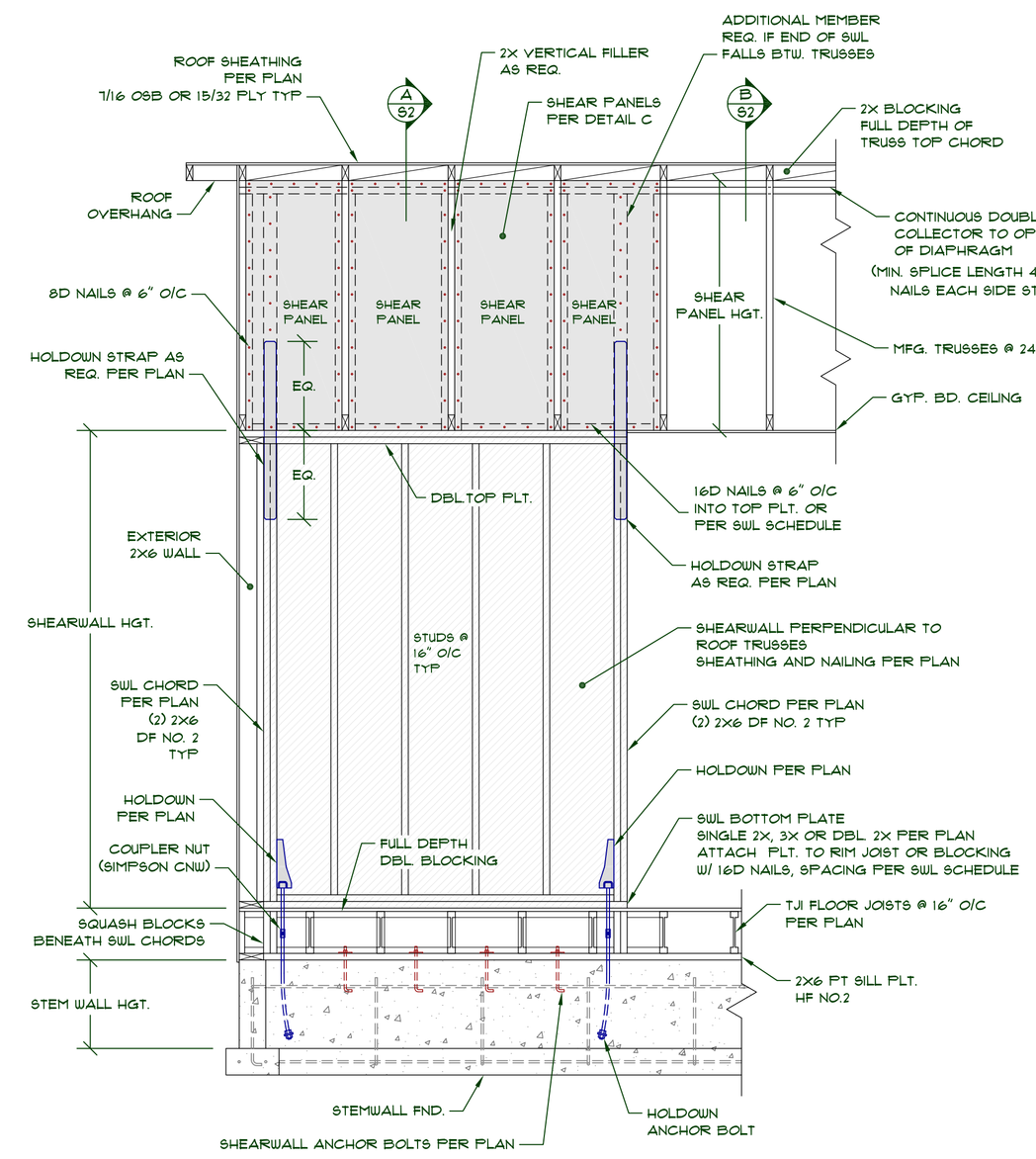

1 INTERIOR SHEARWALL PERPENDICULAR TO TRUSSES

SCALE: 1/2"=1'-0"

SHEAR PANEL SCHEDULE	
SWL #	Shear Panels above SWL C
Shear (lbs)	6533
Shear Length	8 (drag truss) + 12 (shear panels)
# of Panels	6 panels @ 22.5" ea.
Unit Shear	327 plf
Shear Panel Hgt.	6.5 ft
Overturning	2,120 lbs
Holdown Strap	MSTC28 (locations per notes)
Panels to Truss	Use 16d nails @ 6" o/c
Panels to SWL	Use 16d nails @ 6" o/c
Panels to Blocking	Use 16d nails @ 6" o/c
Panel Sheathing	Use 8d nails @ 4" o/c
Roof Sheathing to Blocking	Use 8d nails @ 4" o/c

NOTE:

FLOOR PLANS DIMENSIONS ARE TO FACE OF FRAMING OR CENTERLINE OF OPENINGS TYP. AS SHOWN.

ATTENTION !

IT IS IMPORTANT FOR THE GENERAL CONTRACTOR TO UNDERSTAND THAT IT IS HIS/HER RESPONSIBILITY TO BE SURE THIS PROJECT IS CONSTRUCTED IN FULL COMPLIANCE WITH ALL STATE AND LOCAL CODES AND ORDINANCES. THE PLANS ARE NOT ALL INCLUSIVE OF ALL MINIMUM CODES AND ORDINANCES. THIS FACT DOES NOT RELIEVE THE CONTRACTOR FROM COMPLIANCE WITH ALL MINIMUM STANDARDS. NO OMISSION FROM THESE PLANS GIVES PERMISSION
FOR VIOLATION OF ANY CODE OR ORDINANCE. NO APPROVAL EVER GRANTS PERMISSION TO VIOLATE ANY CODE OR CITY ORDINANCE.

THE GREATEST EFFORT HAS BEEN MADE TO DRAW THESE PLANS WITHOUT ERROR. HOWEVER THERE IS NO GUARANTEE THAT THESE PLANS ARE WITHOUT ERROR. THE ARCHITECT, DRAFTSMAN & ENGINEER ARE TO BE HELD HARMLESS OF ANY FINANCIAL LIABILITY RESULTING FROM ERRORS IN THESE PLANS. ANY ONE USING THESE PLANS FOR CONSTRUCTION OF THIS BUILDING ACCEPT FULL RESPONSIBILITY. (CHECK PLANS CAREFULLY BEFORE AND DURING CONSTRUCTION.)

COPYRIGHT © 2015 MEDEEK DESIGN INC.

MEDEEK ENGINEERING INC.
3030 SR 109 OCEAN BEACH, WA 98613
(P) (425) 420-2713
DESIGN@MEDEEK.COM

No.	Description	Date
1	ISSUED FOR PERMIT	2/11/2014

ALL INFORMATION CONTAINED ON THIS DRAWING IS INTENDED FOR USE ONLY FOR THE PROJECT SPECIFIED. ANY OTHER USE OR REPRODUCTION WITHOUT WRITTEN CONSENT OF MEDEEK ENGINEERING INC. IS PROHIBITED. CONTACT OFFICE FOR ADDITIONAL USE.

PLAN NO.

SHEARWALLS

REVISION: 2.1

SCALE: 1:24

DESIGNED BY: NPW

DATE: 2/11/2014

STRUCTURAL DETAILS

SHEET CONTENTS:

REVISION HISTORY:

CUSTOMER:

LOCATION:

SHEET

S1

OF 1